RSW & IPR

INTELLIGENTE PERIPHERIEN FÜR ROBOTER

PRESENT

THE WORLD'S FASTEST AND MOST UNIVERSAL

MIXED CASE PALLETIZER EOAT TOOL

RSW IP BV 2013

ABOUT **RSW & IPR**

- **Foundation:**
  (IPR) In 1989 by Fredy, Theo Doll & Petra Söhner-Doll
  (Sohner) In 1968 by Günther Söhner
- **Competence:**
  (IPR) Development and manufacturing of high quality End-of-Arm-Tooling
  (Sohner) Packaging development, plastic deep-drawing technology, singlesheet and twinsheet finishing, mould construction
- **Headquarter:** Schwaigern close to Heilbronn/ Germany
- **Staff:** Approx. 250 employees

- **Foundation:** In 2004 by Marcel van Schijndel
- **Competence:** Development and engineering of innovative mixed case palletizing technology (MLS SPIDER & MXRP), Intelligent mixed case palletizing software & Layer depalletizing EOAT grippers
- **Headquarter:** Zwolle (NL) close to German border (Oberhausen)
- **Staff:** 4 employees + 3 part-time

ABOUT **IPR** - STANDARD PRODUCTS

Gripper

Tool changer

Load Limiter

Alignment Device

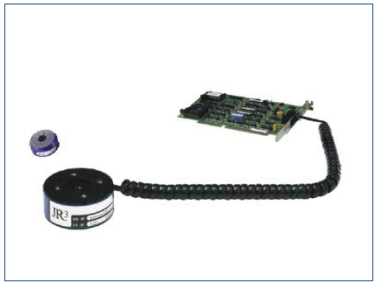

Force-Torque Sensor

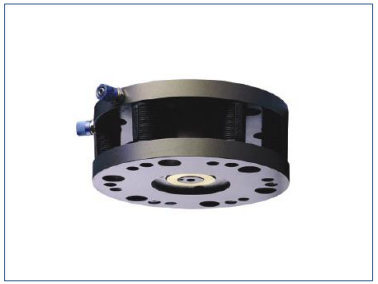

Compliance Wrist

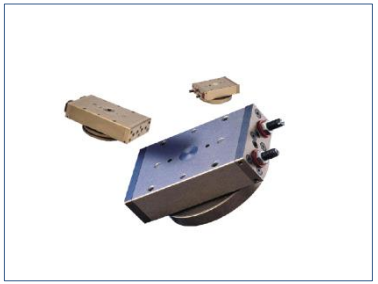

Rotary Actuator

Sand Core Grippers

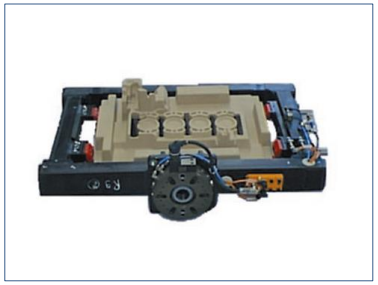

Sand Core Grippers

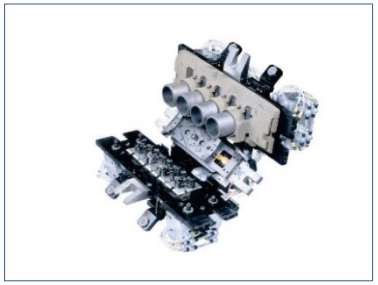

Special Grippers

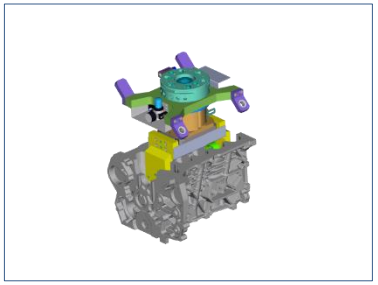

Handling Grippers

Die Casting Grippers

ABOUT **RSW**

RSW develops, builds and supplies innovative logistic solutions that provide a full framework for the changing market requirements. Solutions that in effect serve only a single logistic goal: to make working in high-end distributions centers and warehouses as efficient and simple as possible.

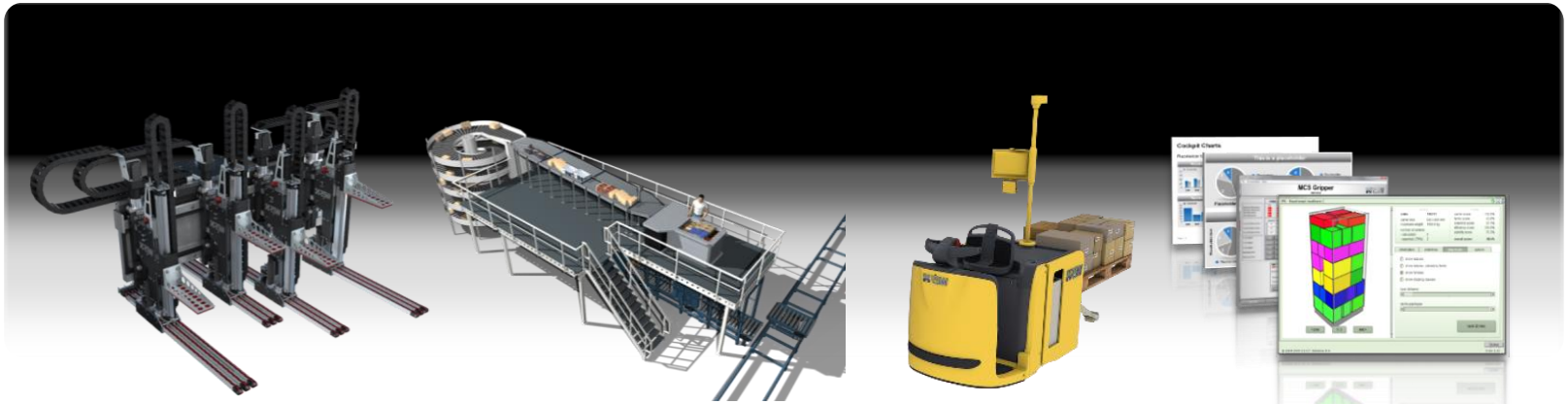

EOAT GRIPPERS

SYSTEM SOLUTIONS

WAREHOUSE OPTIMIZATION

SOFTWARE & CONTROLS

THE CHALLENGE OF FULL AUTOMATIC

MIXED CASE PALLETIZING

*"New mixed case robotic palletizing system from RSW and IPR offers a **performance increase** of up to **3 times** that of existing case pick solutions through innovative pick and place technology"*

MANUAL **MIXED** CASE PALLETIZING

IT IS A CHALLENGE!

- EVEN TO DO THIS MANUALLY -

1 FTE = MAX **200** MIXED CPH

AV PROJECT SIZE = 3200 – 4000 MIXED CPH = 16 – 20 FTE'S

AND STILL A CHALLENGE!

- WITH OPTIMIZED TOOLS -

1 PACKSTATION = MAX **600** MIXED CPH

AV PROJECT SIZE = 3200 – 4000 MIXED CPH

= 5 – 7 ROBOTIC CELLS + 5-7 FTE

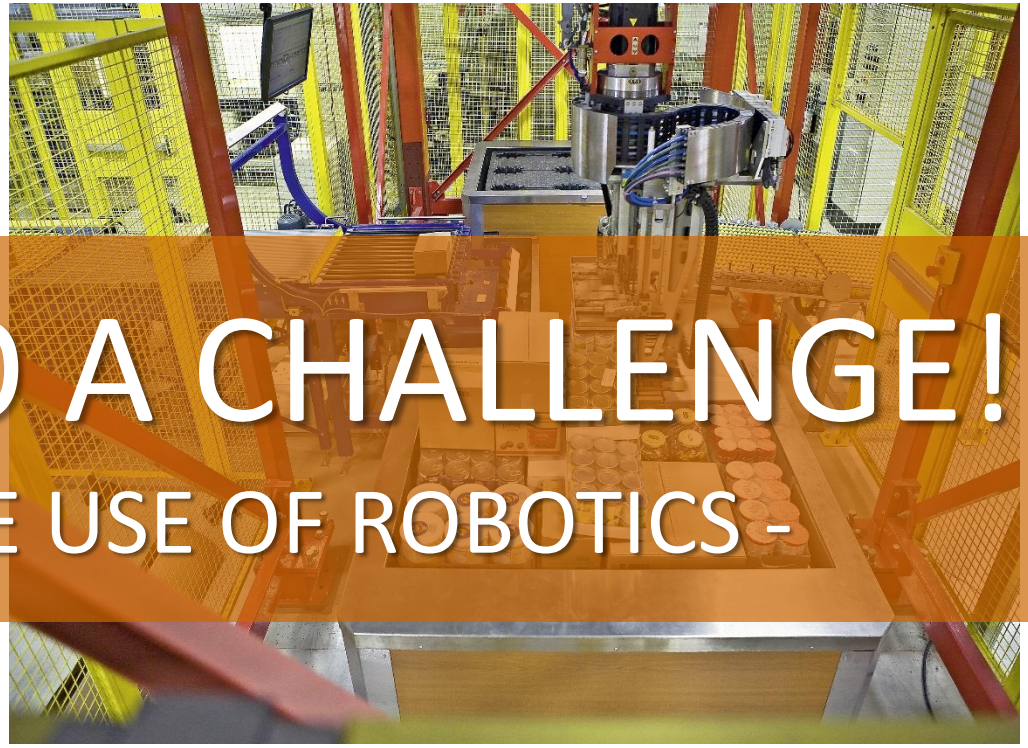

AND ALSO A CHALLENGE!

- WITH THE USE OF ROBOTICS -

1 ROBOT = MAX **500** **MIXED CPH**

AV PROJECT SIZE = 3200 – 4000 MIXED CPH

= 6 – 8 ROBOTIC CELLS

THE **CHALLENGE**

Mixed SKU order picking and **mixed case palletizing** has become the bane of every warehouse owner's existence, yet it is the most **critical** task in the distribution center (DC). Along with the everyday challenges such as **SKU proliferation** and **crowded warehouses**, manufacturers have to address several operational challenges across their distribution network as well:

- Daily Sales orders needing to be picked and loaded within an **8 – 12 hour** window
- Changing Order profiles & SKU additions causing a **decrease** in picking **productivity**
- Pallet Build **Complexity** driving **higher damages**, **Out-of-Stocks**, and **miss-picks**
- High employee **turnover**, **low morale**, and increasing **labor** & **benefit costs**.
- Too **little space** and too **much volume** to process in too **few hours**

MXRP- **ADDITIONAL HARD/SOFTWARE**

FULL 1 SKU PALLET INFEED

LAYER DE-PALLETIZING & DESCRAMBLING

AUTOMATIC ORDERPICK SYSTEM

SYSTEM INTEGRATOR

RSW-IPR & RESELLER

SEQUENCING

TURN-ALIGN-PICKUP

MIXED PALLETIZING

OUTFEED MIXED PALLET

THE **MXRP** ANIMATION

MXRP - **FORK ELEMENT**

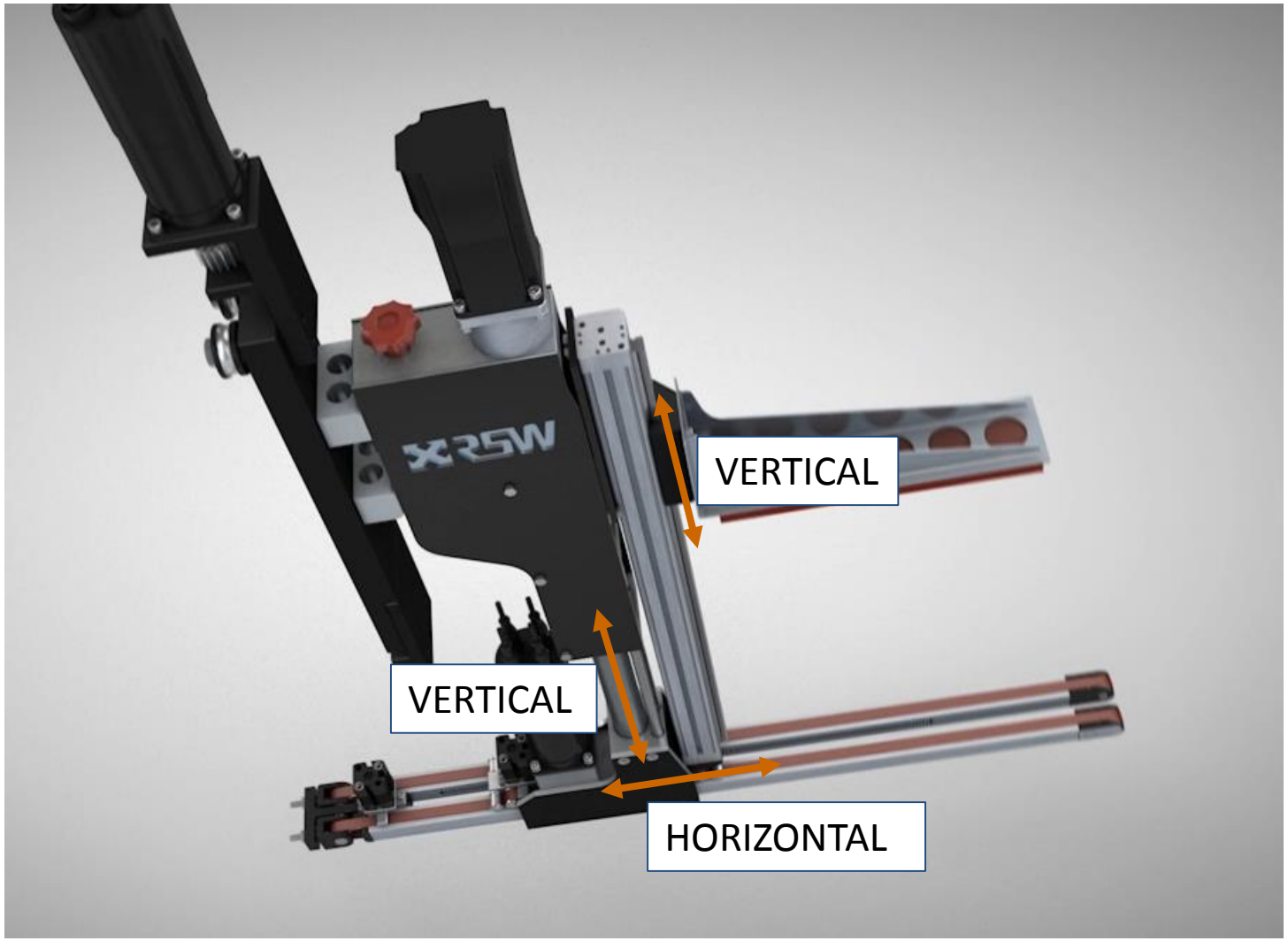

MXRP – **GRIPPER AXES**

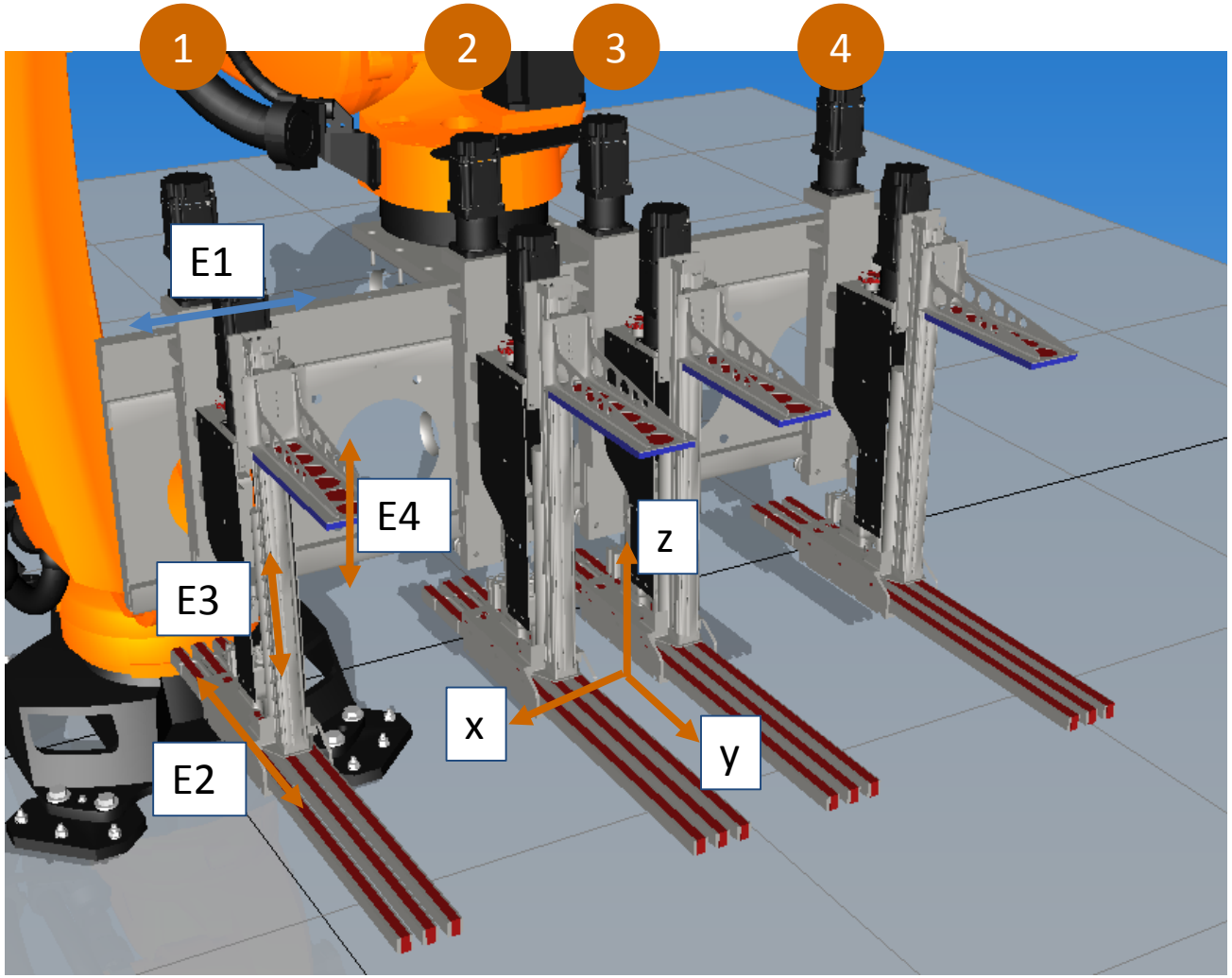

MXRP- **PICKUP CONVEYOR**

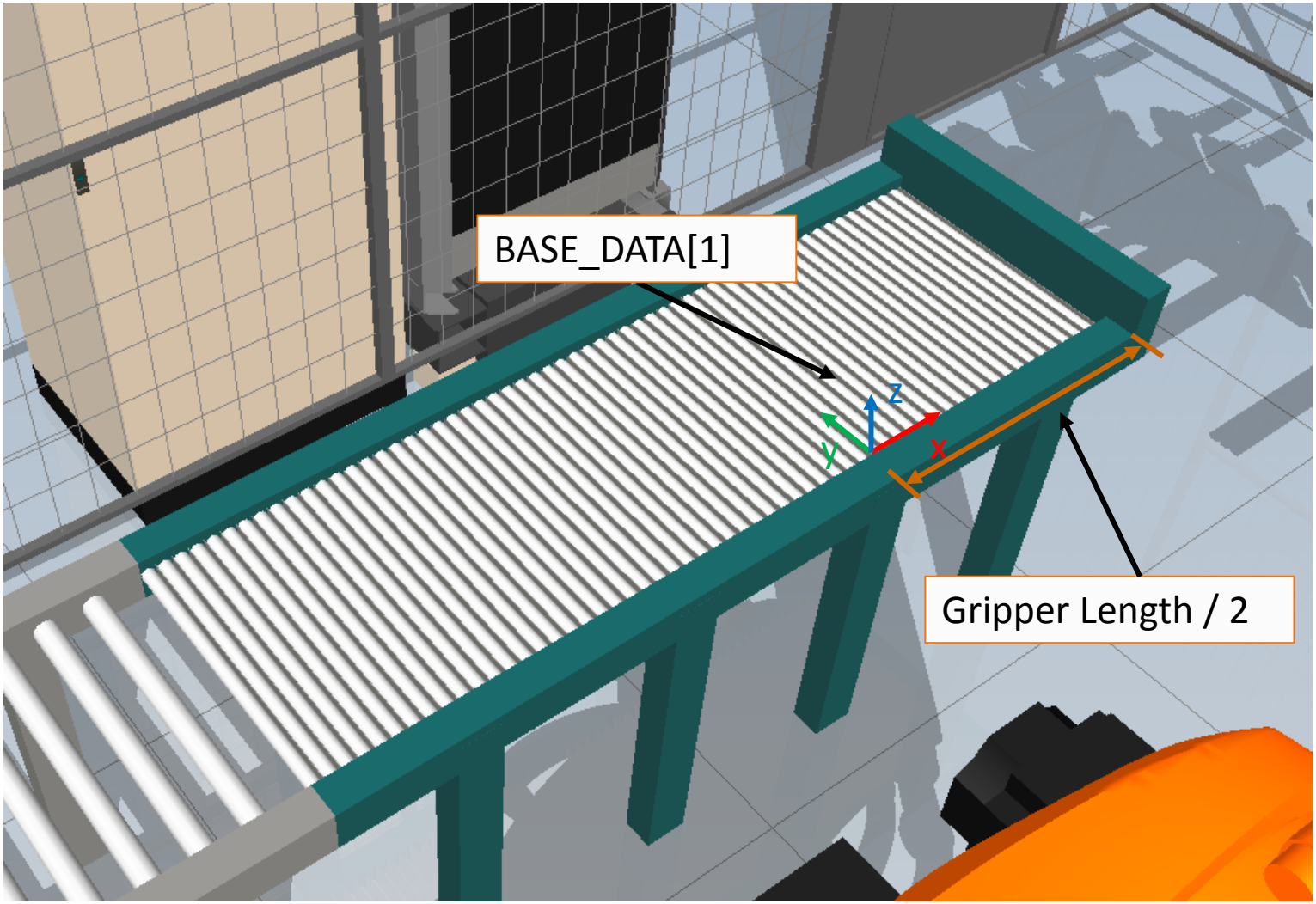

MXRP- **PICKUP POSITION**

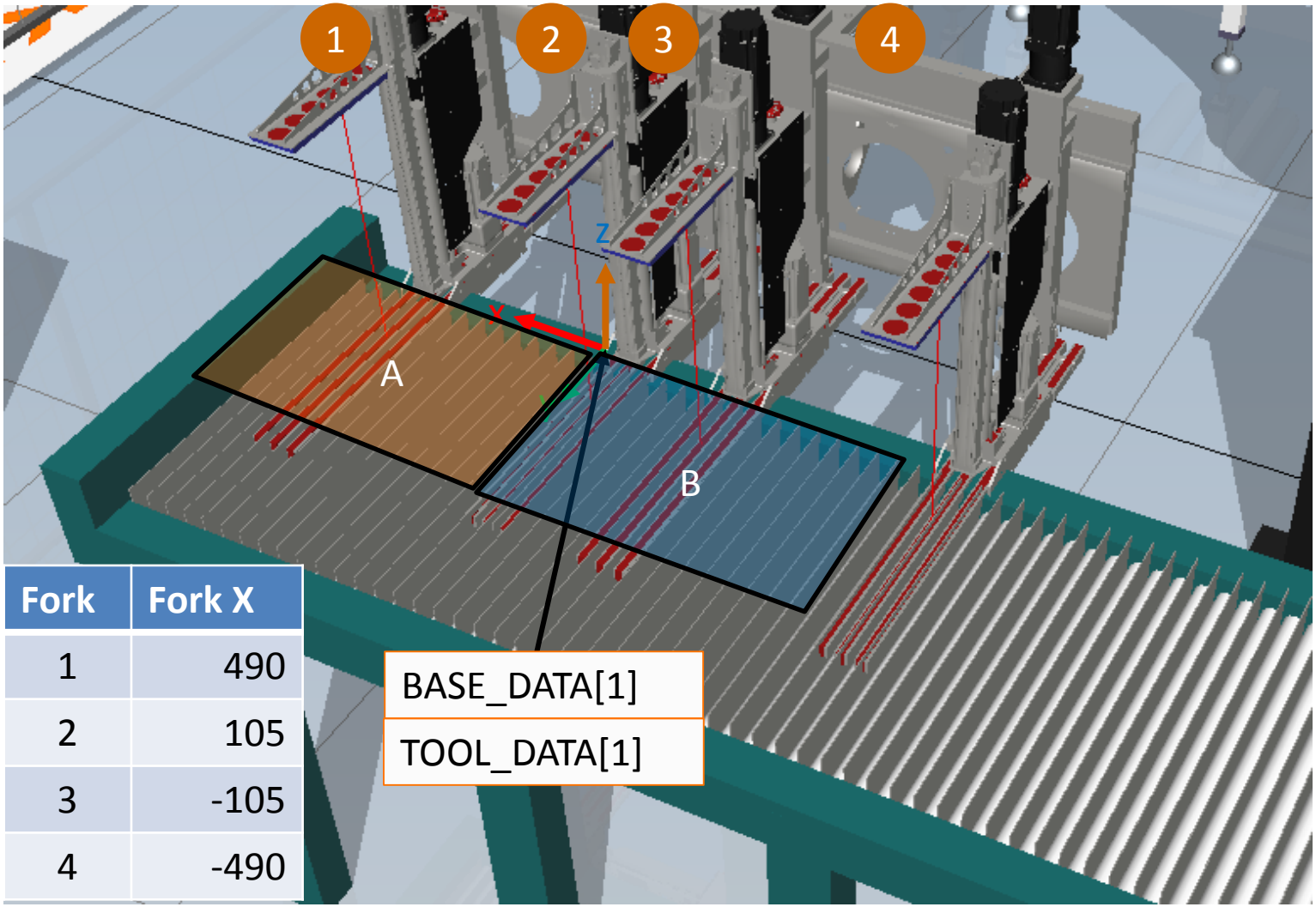

Fork	Fork X
1	490
2	105
3	-105
4	-490

BASE_DATA[1]

TOOL_DATA[1]

MXRP- **TARGET CONVEYOR**

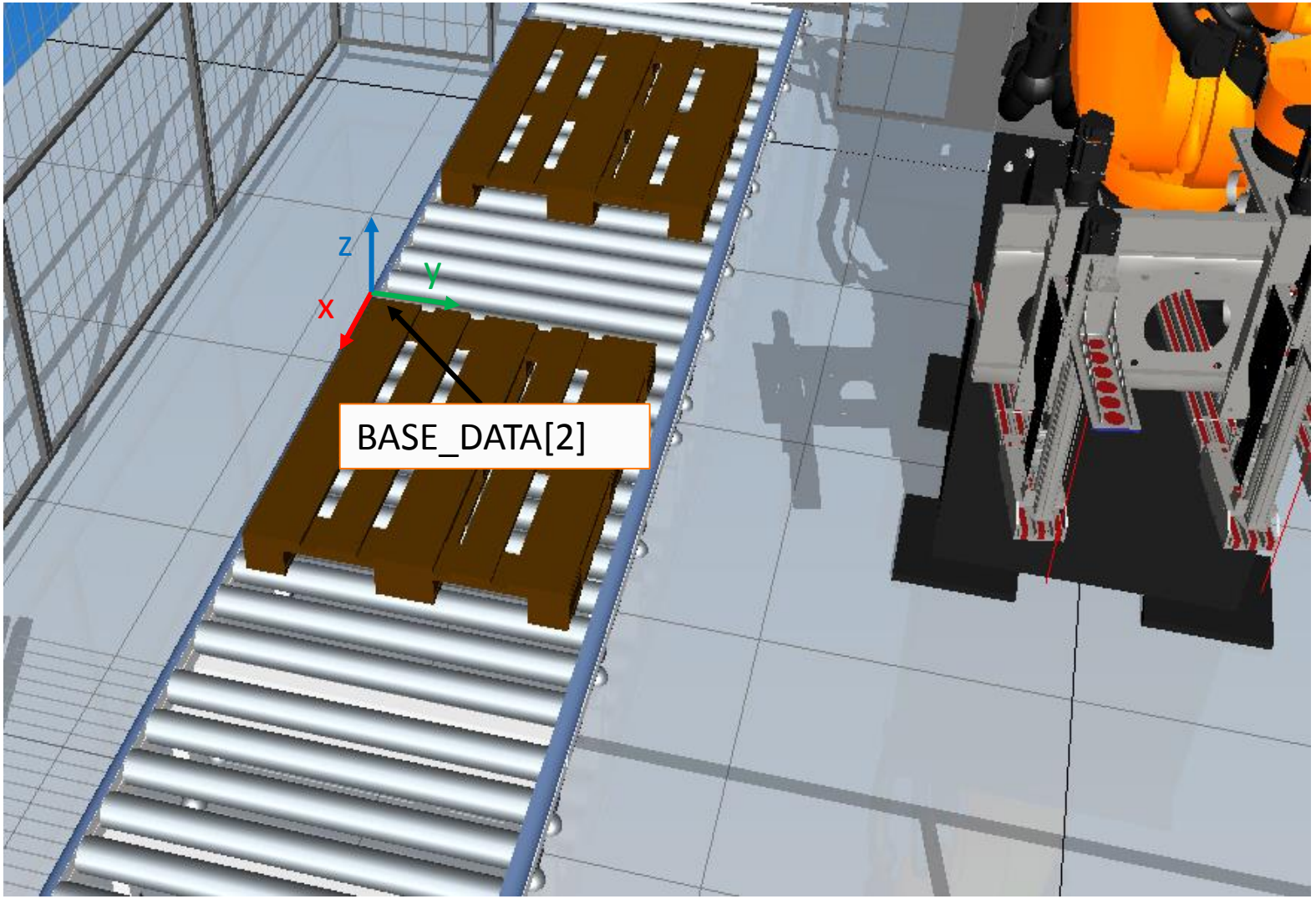

MXRP- **LAYOUT CONFIGURATIONS**

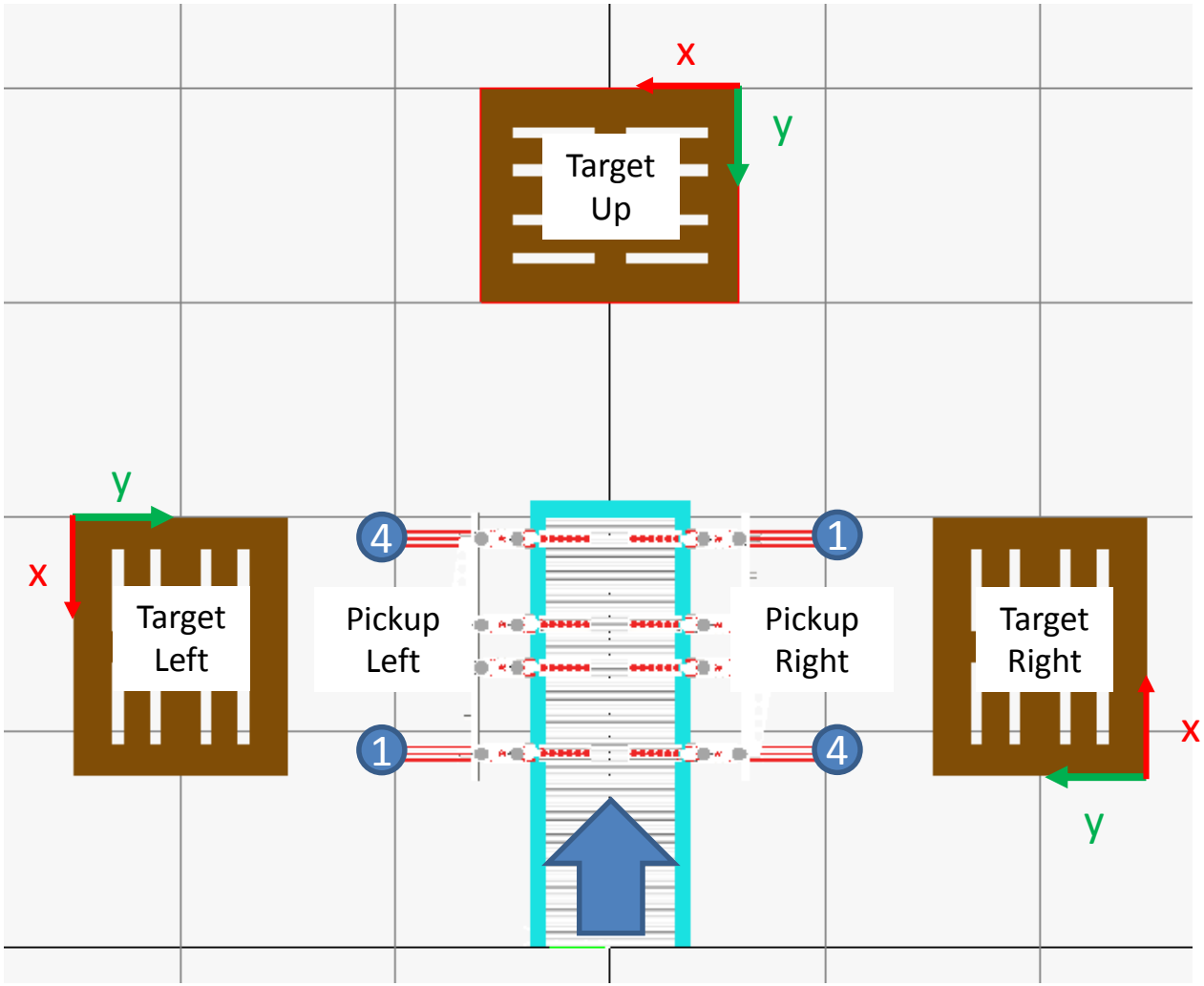

THE SOLUTION - **MXRP**

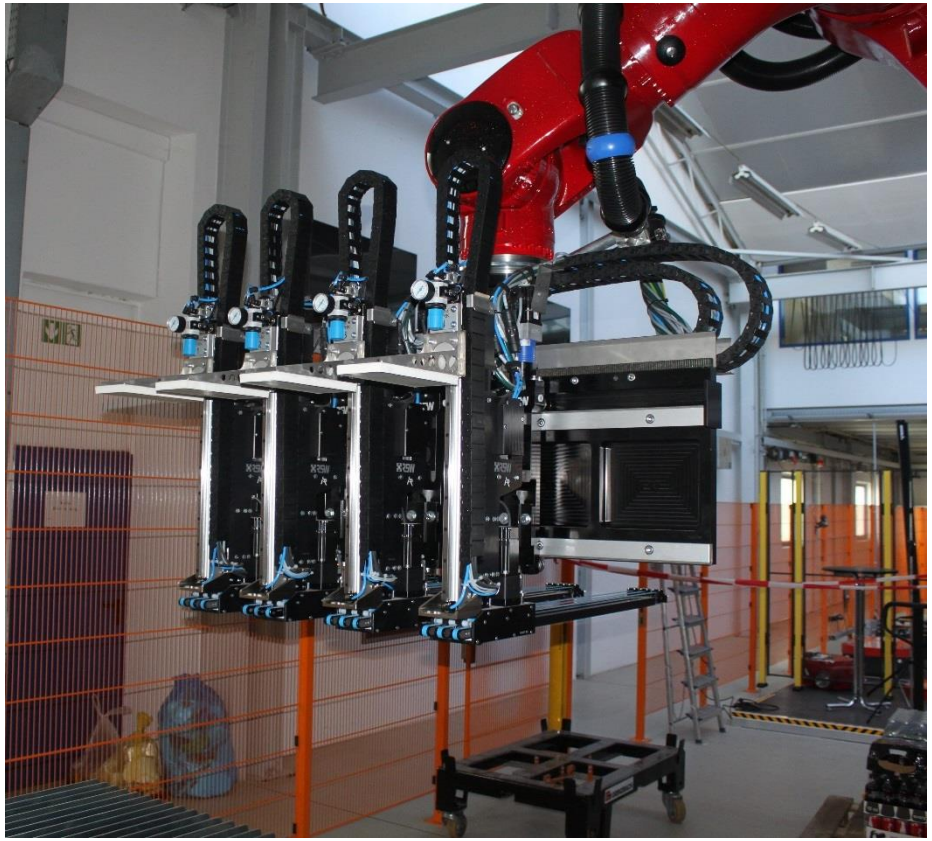

THE **FASTEST**, **UNIVERSAL** & **FLEXIBLE** EOAT GRIPPER!

MXRP- **CONTROLS & SOFTWARE**

Conveyor PLC

Modular WCS

IPS

INTEGRATOR

RSW - RESELLER

Cell PLC

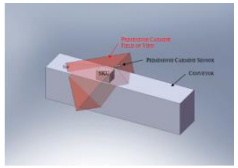

Dimension Verification

Gripper PLC

Robot Control

Palletizing Control and Cell HMI

Ethernet TCP/IP

Any Fieldbus

EthernetIP

MXRP – **IPS SOFTWARE**

Palletizing mixed products requires **maximum efficiency** (costs) and **stability** (transport). This **high-tech stacking software** is required in combination with the MXRP technology.

- it takes into account all packaging characteristics
- it takes into account business rules such as family grouping & stacking categories
- business rules can be parameterized at user level

- it has an option for customer-specific simulations
- continuous development of the package
- self-learning system on the basis of historic data

MXRP – **MATERIAL FLOW SIMULATION**

RSW HAS DEVELOPED TOGETHER WITH ITS PARTNERS A UNIQUE SIMULATION PLATFORM THAT CAN BE USED AT ANY CUSTOMER PROJECT.

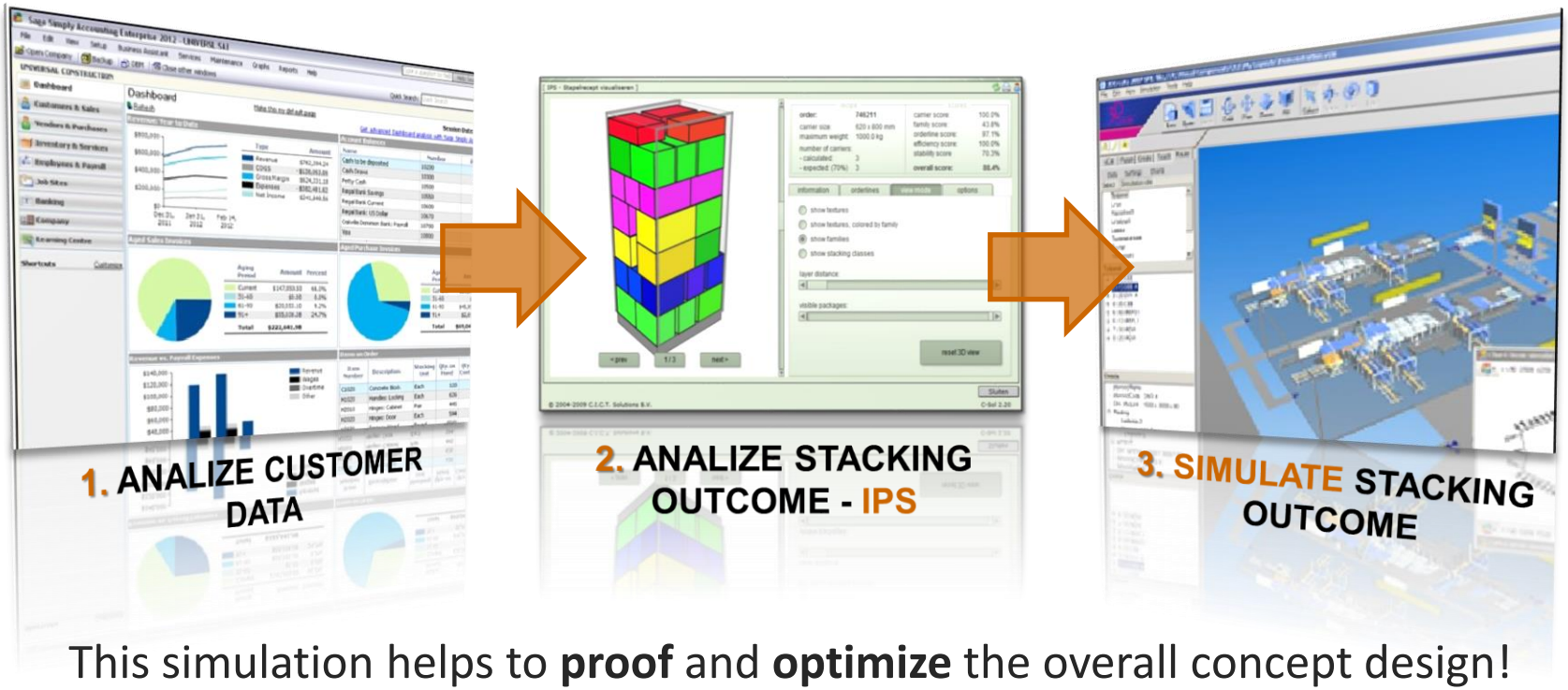

This simulation helps to **proof** and **optimize** the overall concept design!

cenit

Simulation partner of RSW

THE **IMPACT**

The MXRP concept is easily the most **innovative** breakthrough in mixed palletizing over the last decade and will truly **revolutionize** the way warehouses approach sequencing, palletizing, and delivery to stores. Projects and customers like Coca Cola & Pepsico prove this!

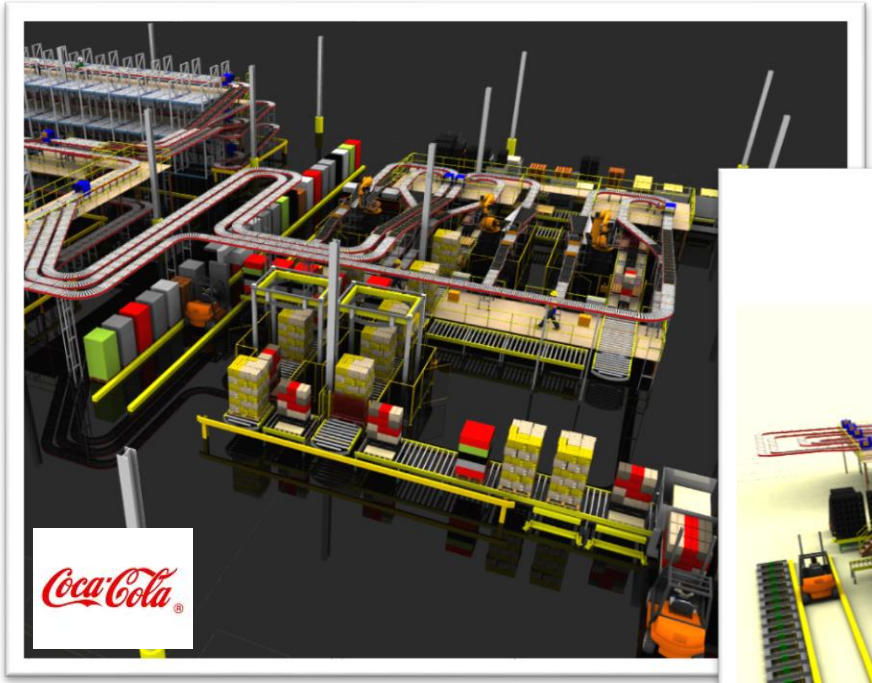

3 x MXRP CELLS = **3600** CPH

6 x MXRP CELLS = **7200** CPH

THE **BENEFITS**

1 MXRP ROBOTIC CELL = **1200 - 1500** CPH

1 ROBOT (SINGLE CASE) = **500 - 600** CPH

1 PACKSTATION = **600 - 700** CPH + 1 FTE

1 FTE = **150 - 200** CPH

+

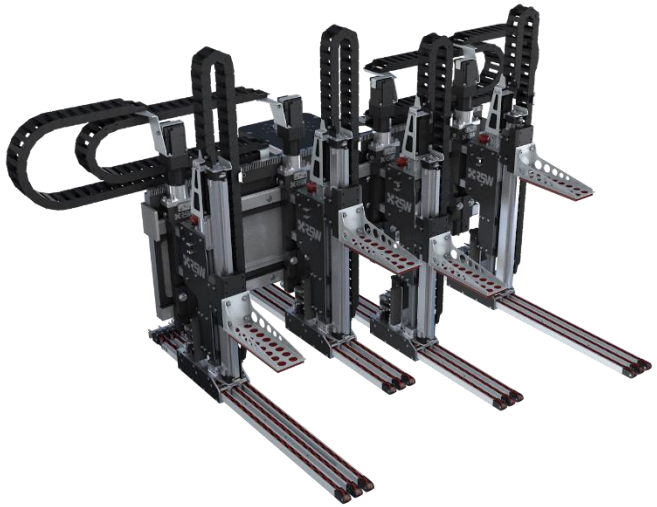

- ✓ **SAVE OF FLOOR SPACE (1 TO 3)**
- ✓ **SAVE ON COMPLEXITY (LESS CONVEYORS)**
- ✓ **SAVE ON RESTACKING (RETURN GOODS)**
- ✓ **SAVE ON FTE'S**

INTERESTED TO BECOME **RESELLER**?

AND JOIN THE GROWING GROUP OF ROBOTIC INTEGRATORS AND SYSTEM INTEGRATORS USING THE RSW-IPR MXRP TECHNOLOGY TODAY. **ARE YOU INTERESTED TO EXPERIENCE THE ADVANTAGE THEY HAVE?**

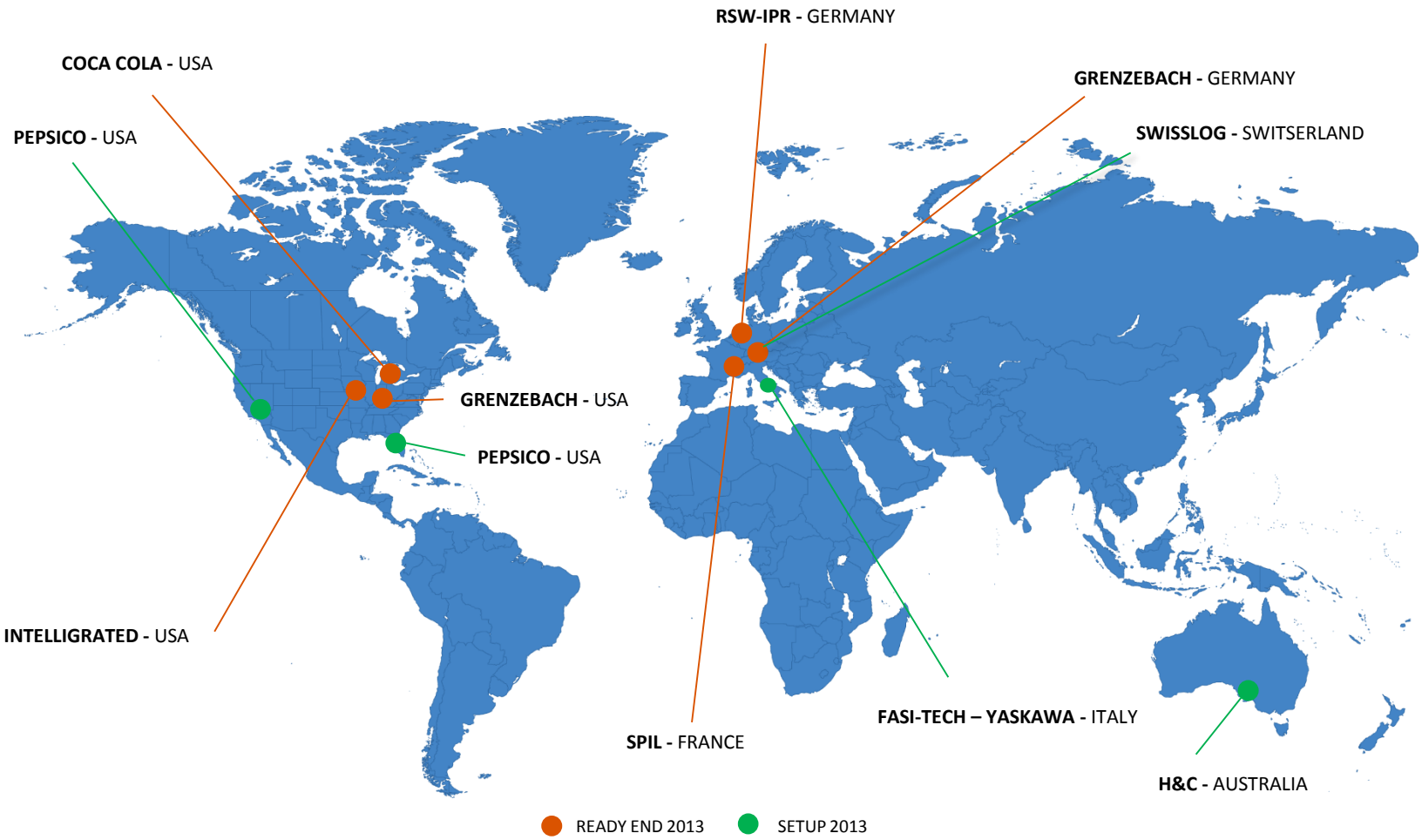

THANK YOU FOR YOUR INTEREST!

Modular **L**ogistics in **M**otion

Dr. Deenweg 13, NL-8025 BP Zwolle, The Netherlands
T: +31 (0)38 – 845.83.55

www.mixedpalletizing.com

YouTube Linked in facebook